CAD FILE:

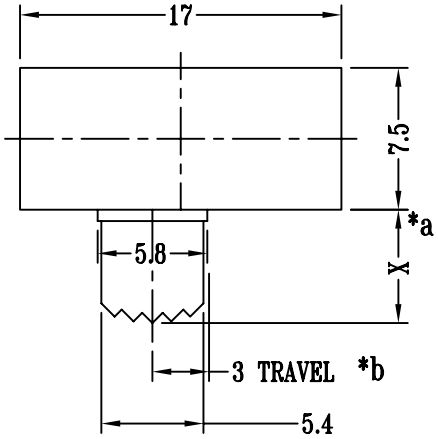

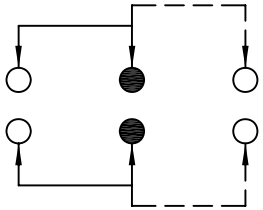

SCHEMATIC (NON-SHORTING)

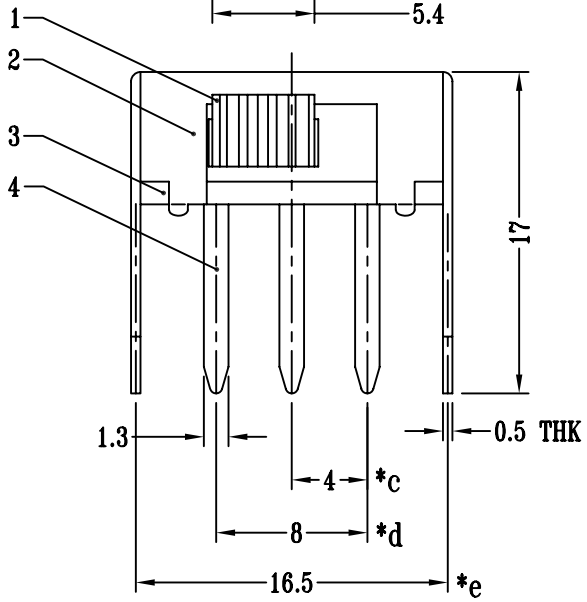

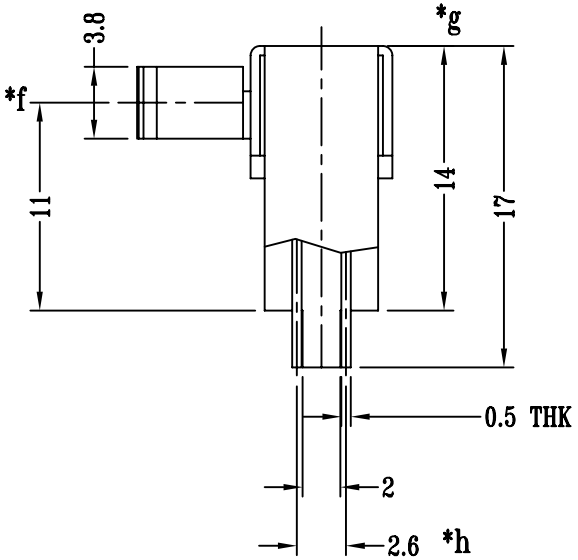

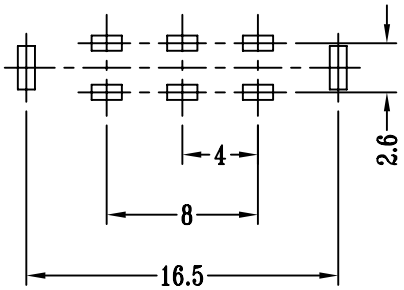

P.C.B LAYOUT

注:带"*"表示关键尺寸(8个)

NO.	PART NAME	MATERIAL	Q'TY	FINISHING
8				
7				
6	SPRING PLATE	STAINLESS STEEL	2	NATURAL
5	CONTACT CLIP	PBS	2	Ag CLAD
4	TERMINAL	BRASS STRIP	6	Ag PLATED OVER Ni PLATED
3	BASE	PHENOLIC RESIN	1	NATURAL
2	FRAME	STEEL STRIP	1	Ni PLATED
1	KNOB	POM	1	BLACK

TOLERANCE UNLESS SPECIFIED
WITHIN: 1.5±0.1mm
OVER : 1.5±0.2mm

SHENZHEN XIEJIA ELECTRONICS CO.,LTD.

ISSUE	DATE	DESCRIPTIONS	APPD.

TITLE : HORIZONTAL SLIDE SWITCH

UNIT : MM

DRWG NO.: XJ-DR-SK22F07-00

MODEL: SK-22F07

SCALE: 2:1

DWN.	ZHOUYU	2003-9-4
CHK'D	FANGYING	2003-9-4
APPD.	KANGXINAN	2003-9-4

ALL MATERIALS MUST BE COMPLIANT TO ROHS